THE PRESSURE

Harvesting is still the bottleneck in high-value crops.

Glasshouses and vineyards can invest in climate, irrigation, genetics and logistics, but the final step still depends on scarce seasonal labor.

Labor

Growers face chronic worker shortages during narrow harvest windows.

Timing

Missed harvest timing means lost quality, lost kilograms, and operational stress.

Capex

Most growers cannot justify large upfront robotics purchases before reliability is proven.

HIGH-VALUE CROP HARVESTING, REINVENTED

Robotic harvest fleets for growers who cannot find enough hands.

Harnix combines semi-autonomous field robots, human teleoperators in Moldova, and a pay-per-cut commercial model (€0.01/cut). We are actively raising our pre-seed round now.

HARNIX

Harvix greenhouse platform prototype



THE SYSTEM

Semi-autonomous robots, backed by remote human judgment.

Robots handle repeatable picking. Edge cases are pushed to a global queue and resolved by trained teleoperators working from Moldova.

Fleet operation

Edge-case queue

Pay per cut: €0.01/cut

PRODUCT FAMILY

One architecture, four roles in the harvest workflow.

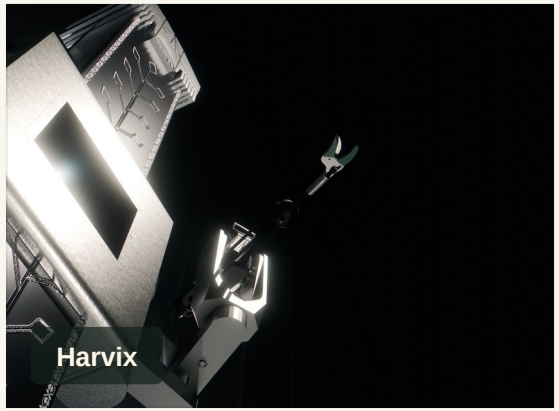





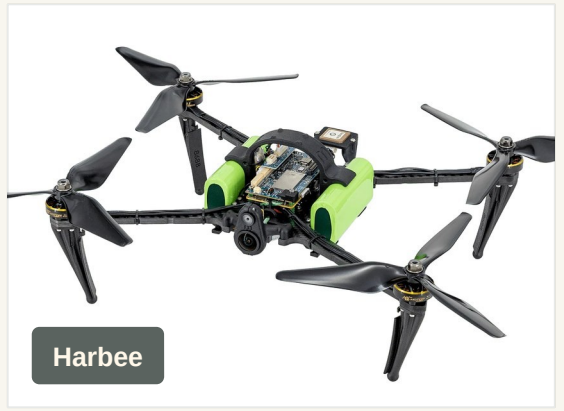

Harvix

Pipe-rail telerobot for greenhouse tomatoes, peppers, cucumbers and strawberries.

Harvier

Tracked outdoor platform for uneven terrain, starting with table grapes.

Harpoon

Smart scissors that captures cutting data with 3D vision and inertial sensors.

Harbee

Drone that maps fields before Harvix or Harvier begins harvesting.

DATA ADVANTAGE

Before autonomy comes the dataset.

Harpoon is already being used in the field. We are slowly building the dataset today, and that process accelerates once the pre-seed team is full time.

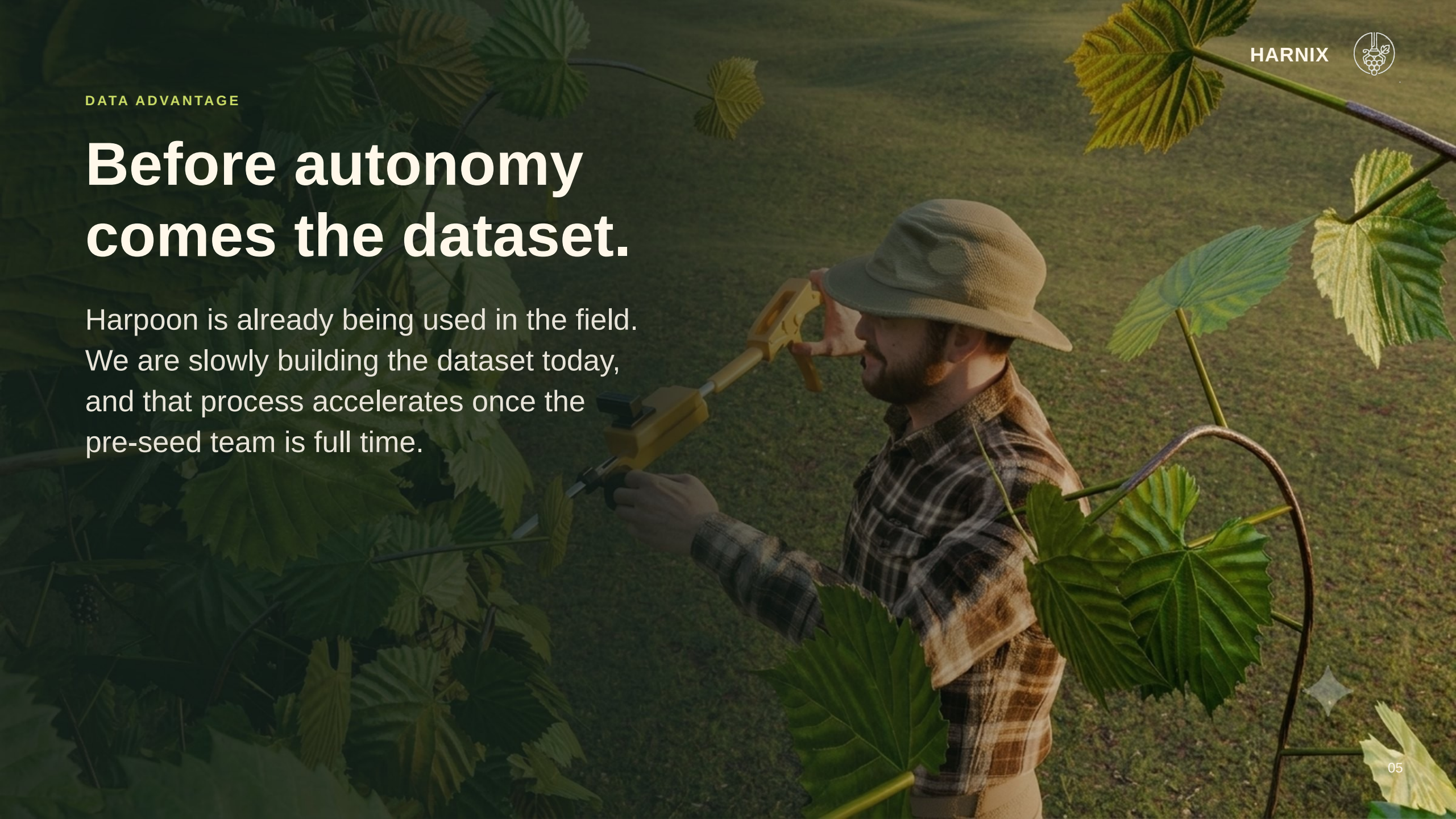

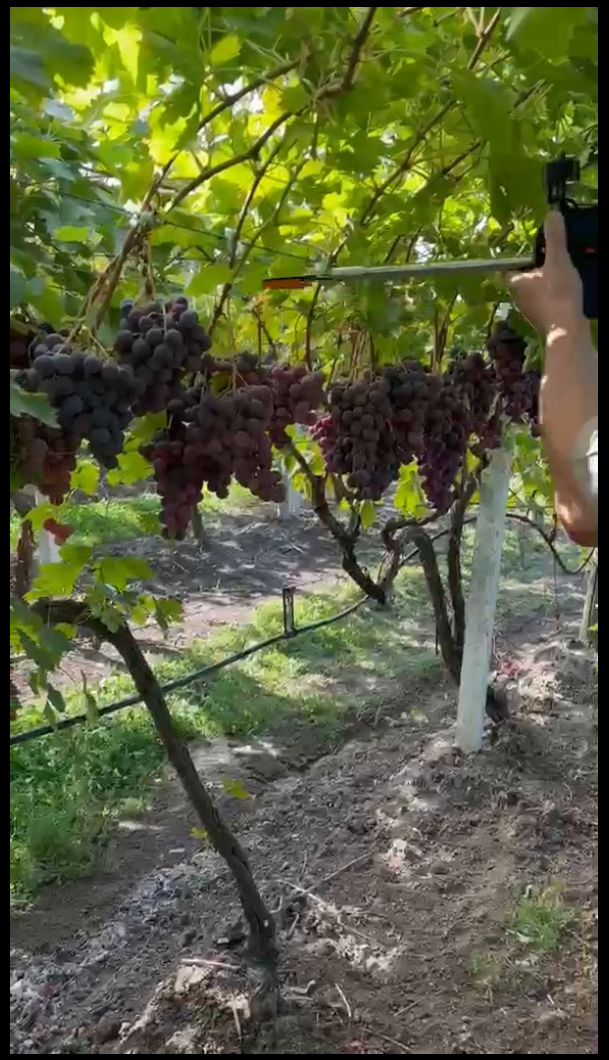


al_frame


Depth

BUSINESS MODEL

No robotics capex cliff for the grower.

Harnix gets paid per cut: €0.01 per cut. The model aligns revenue with delivered harvest work and lowers adoption friction for farms.

Grower

Minimal upfront investment. Pays for harvested output.

Harnix

Recurring revenue tied to cuts and fleet utilization.

Operator

Remote jobs in Moldova replace seasonal migration with skilled work.

Fleet

Each resolved edge case trains better autonomy for every robot.

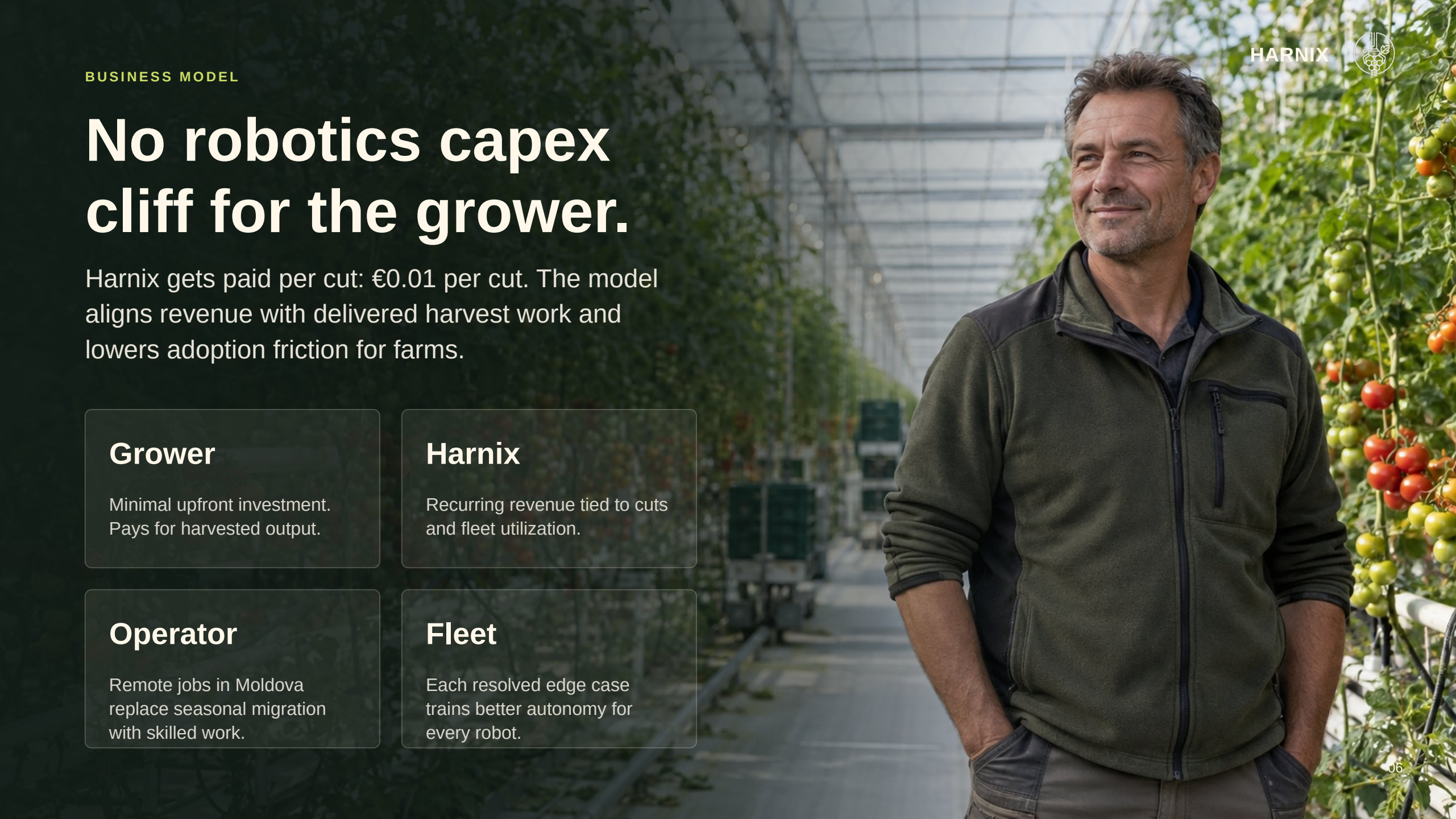

Unit economics (per robot).

PER ROBOT-HOUR	€
Gross revenue	**7.20**
Operator (1 : 5 robots)	−1.00
Amortization (€15k / 15k h)	−1.00
Maintenance	−0.50
Energy + network	−0.17
Net	**~3.5–4.5**

€15,000
Robot cost

15,000 h
Lifetime ≈ 2.8 years at ~5,300 h/yr

€108k
Lifetime gross per robot

~€53–68k
Lifetime net per robot

~6 months base · ~18 conservative
Payback of operation

Year-round glasshouse, tethered, 20 h/day, 85% uptime, 26 days/month. Assumes 12 cuts/min × €0.01 = €7.20/h and a 1:5 operator ratio; conservative case 6 cuts/min. Lifetime gross = 15,000 h × €7.20. Net range reflects on-site tech, insurance, and night premium not yet itemized.



WHY MOLDOVA

A robotics company built where the leverage is real.

Harnix Telerobotics SRL is incorporated in Moldova, with a subsidiary in Romania (Cluj) and operations in the Netherlands from 2027.

> Robot assembly lines planned for Chisinau, Balti, Cahul and Tiraspol as the company scales.

> Regional teleoperation centers create skilled jobs for young people comfortable with gamepad control.

EXECUTION PLAN

Three phases from validation to a self-sustaining fleet business.

Phase 1

Build 5 Harpoons and 5 Harvix prototypes. Collect approximately 500k cuts and demonstrate a semi-autonomous fleet with 1-2 teleoperators by next year.

Phase 2

Consolidate design, build 50 robots, deploy to the Netherlands, and operate with a Moldova-based teleoperation team.

Phase 3

Scale production and operations after Series A, with the fleet business designed to become self-sustaining.

WHERE WE ARE NOW

The product work is past the napkin stage.

Harvix CAD, electrical design and software are ready. A working digital twin runs in simulation while motors, reducers, chassis, belts and electronics are being acquired.



Harpoon — Actively used in the field to collect harvesting data.

Harvix — Design ready; components now being acquired for prototype buildout.

Harvier — Design ready; main components from China expected in roughly two months.



The prototypes we have built.

Harvix lift-and-arm platform and Harpoon smart scissors, built by the Harnix team.

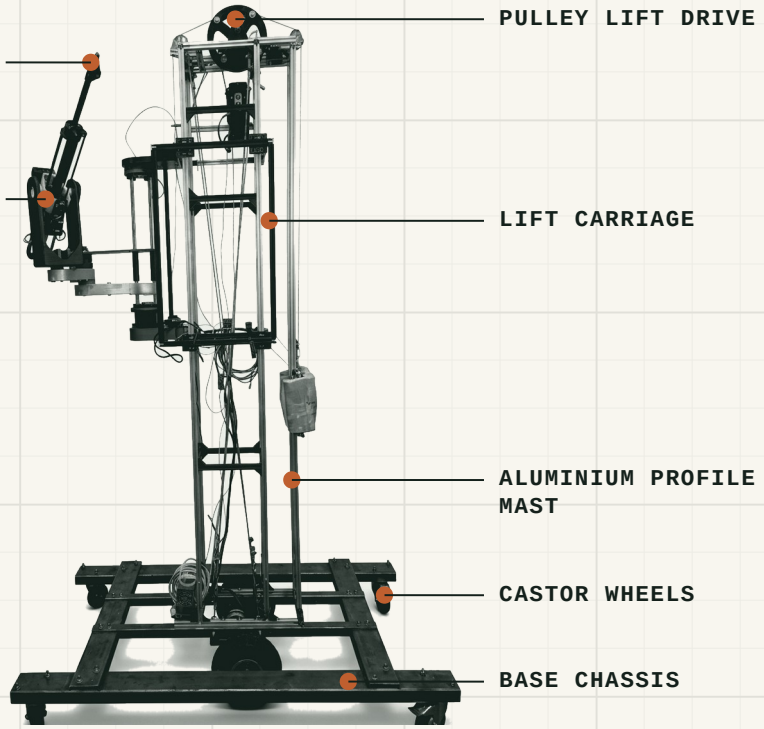

FIG. 01

Harvix — lift-and-arm prototype

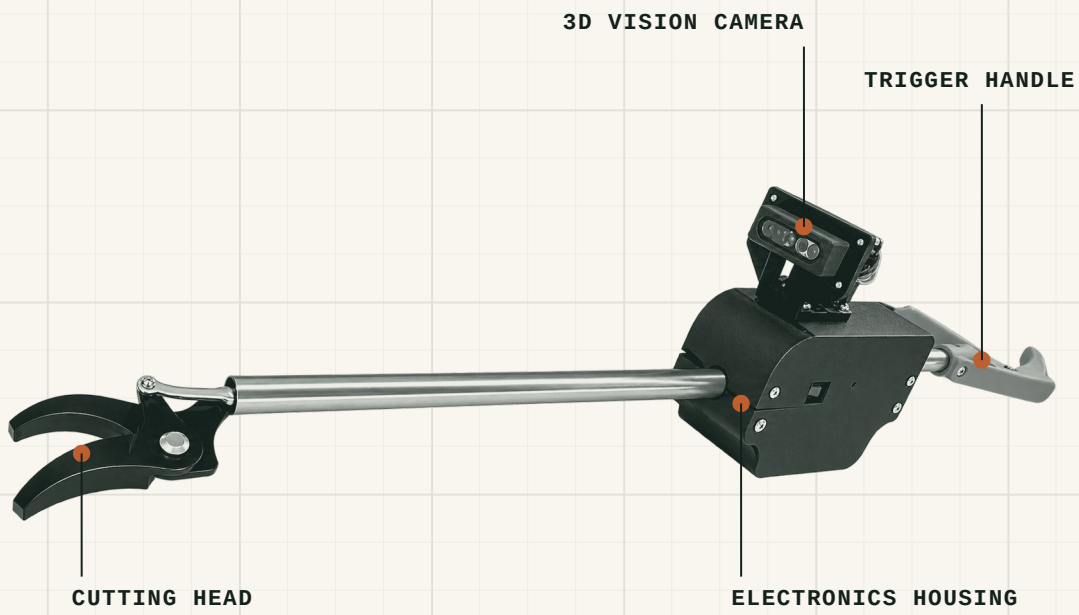

FIG. 02

Harpoon — smart scissors with 3D vision

TEAM

Two senior engineers plus the next Moldovan robotics cohort.

After the pre-seed round, Harnix will have two senior engineers and five interns working full time on Harvix. Vlad Vedrasco, CEO of Harnix, is also co-founder of Frudova.

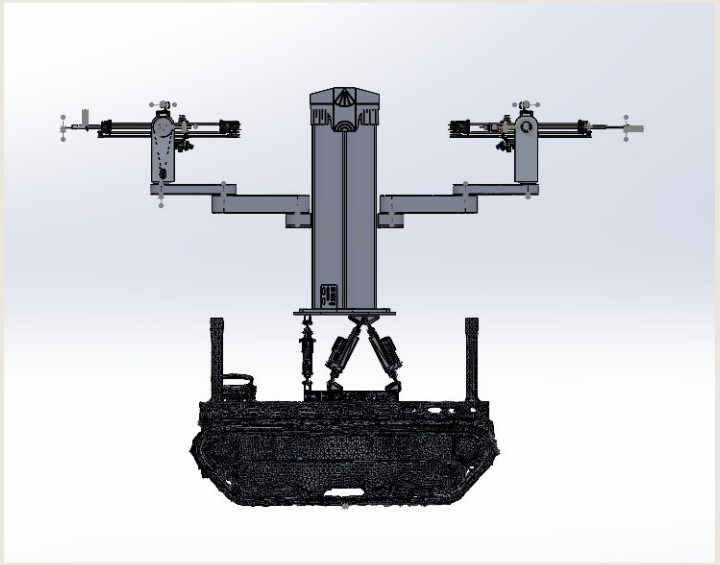



STRATEGIC PARTNER

Frudova gives Harnix a real field laboratory and grower network.

Frudova is Moldova's largest exporter of table grapes. The partnership gives Harnix field access, operational feedback and a wider network of fruit growers across Europe.

WHY NOW

Robotics does not need to replace every worker before it creates value.



The practical wedge is remote exception handling: automate the repeatable work first, route difficult moments to humans, and improve autonomy from real harvest data.

Unlock the first proof point.

THE ASK

$500k

Pre-seed $500k to move faster on prototype buildout and field data collection.

- Put 2 senior engineers and 5 interns full time on Harvix.
- Build 5 Harpoons and 5 Harvix prototypes.
- Collect the first 500k-cut dataset.
- Demonstrate field harvesting with 5 robots and 1 teleoperator.

Next rounds: $5M seed after proof of concept, for 50-robot deployment, then $25M Series A for scale.

CLOSING

Harvesting exported as technology, not migration.

Harnix is building the robot fleet, the dataset, and the operating network to make high-value crop harvesting reliable again.

HARNIX

